KWC EVE

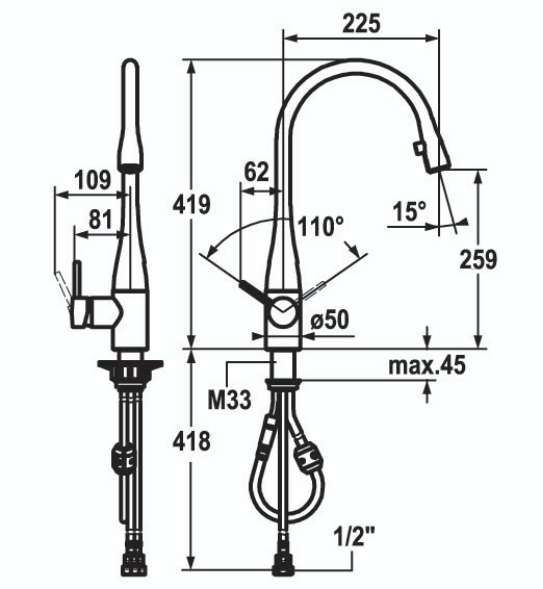

KWC EVE With Light
(10.121.103.150)

Lever Mixer
Lever installation possible on the right or left hand side allows for versatile set-up
KWC 15 Year Warranty guarantees reliability for years to come
WELS 5-Star (6 l/min)
Pull-out aerator covered
- Neoperl cache

Lever mixer with LED technology
- integrated ON/OFF push button with automatic shut-off after 45min.
- up to 600mm pull-out length

Hose guide, swivelling 270˚

WELS Rating: 5 star / 6Lpm

PR Kitchen & Washroom Systems
83 Bangholme Road, Dandenong South, Victoria
3175 Tel: +61 3 9700 9100 Fax: +61 3 9700 9191
Email: info@prks.com.au
ABN: 80138663279

www.kwcswiss.com.au